UNITED STATES BANKRUPTCY COURT
NORTHERN DISTRICT OF TEXAS
DALLAS DIVISION

PROOF OF CLAIM

THIS SPACE IS FOR COURT USE ONLY

Debtor: Excel Communications Marketing, Inc

Case Number: 04-81695-BJH-11

NOTE See Reverse for List of Debtors and Case Numbers

This form should not be used to make a claim for an administrative expense arising after the commencement of the case A "request" for payment of an administrative expense may be filed pursuant to 11 U S C § 503

☐ Check box if you are aware that anyone else has filed a proof of claim relating to your claim Attach copy of statement giving particulars

☐ Check box if you have never received any notices from the bankruptcy court in this case

☐ Check box if this address differs from the address on the envelope sent to you by the court.

If you have already filed a proof of claim with the Bankruptcy Court or BMC you do not need to file again

Name of Creditor and Address

Aerotel, Ltd
c/o Bragar Wexler Eagel & Morgenstern, P.C
885 Third Avenue, Suite 3040
New York, NY 10022

Creditor Telephone Number (XX) (212) 308-5858

Creditor Federal Tax ID

Account Or Other Number By Which Creditor Identifies Debtor

Check here if this claim ☐ replaces or ☐ amends a previously filed claim dated _____

1 BASIS FOR CLAIM

☐ Goods sold
☐ Services performed
☐ Money loaned
☐ Personal injury/wrongful death
☐ Taxes
☒ Other (describe briefly) See Exhibit A
☐ Retiree benefits as defined in 11 U S C § 1114(a)
☐ Wages salaries and compensation (Fill out below)
Last four digits of SS # _____
Unpaid compensation for services performed from _____ (date) to _____ (date)

2 DATE DEBT WAS INCURRED Various

3 IF COURT JUDGMENT, DATE OBTAINED

4 TOTAL AMOUNT OF CLAIM AT TIME CASE FILED $141,000,000.00 (unsecured) $(See Exhibit A) (secured) $ _____ (unsecured priority) $ _____ (Total)
plus enhanced damages for willful infringement.

If all or part of your claim is secured or entitled to priority, also complete Item 5 or 7 below

☐ Check this box if claim includes interest or other charges in addition to the principal amount of the claim. Attach itemized statement of all interest or additional charges

5 SECURED CLAIM

☐ Check this box if your claim is secured by collateral (including a right of setoff)

Brief description of collateral

☐ Real Estate ☐ Motor Vehicle
☐ Other _____

Value of Collateral $ _____

Amount of arrearage and other charges at time case filed included in secured claim if any $ _____

6. UNSECURED NONPRIORITY CLAIM $ _____

☐ Check this box if a) there is no collateral or lien securing your claim or b) your claim exceeds the value of the property securing it, or if c) none or only part of your claim is entitled to priority

7 UNSECURED PRIORITY CLAIM

☐ Check this box if you have an unsecured priority claim

Amount entitled to priority $ _____

Specify the priority of the claim

☐ Wages salaries or commissions (up to $4 925) earned within 90 days before filing of the bankruptcy petition or cessation of the Debtor's business whichever is earlier - 11 U S C § 507(a)(3)

☐ Contributions to an employee benefit plan - 11 U S C § 507(a)(4)

☐ Up to $2 225 of deposits toward purchase lease or rental of property or services for personal family or household use - 11 U S C § 507(a)(6)

☐ Alimony maintenance or support owed to a spouse former spouse or child - 11 U S C § 507(a)(7)

☐ Taxes or penalties owed to governmental units 11 U S C § 507(a)(8)

☐ Other Specify applicable paragraph of 11 U S C § 507(a) (____)

Amounts are subject to adjustment on 4/1/07 and every 3 years thereafter with respect to cases commenced on or after the date of adjustment.

8 CREDITS The amount of all payments on this claim has been credited and deducted for the purpose of making this proof of claim.

9 SUPPORTING DOCUMENTS *Attach copies of supporting documents,* such as promissory notes purchase orders invoices itemized statements of running accounts contracts court judgments mortgages, security agreements and evidence of perfection of lien DO NOT SEND ORIGINAL DOCUMENTS If the documents are not available explain If the documents are voluminous attach a summary

10 DATE-STAMPED COPY To receive an acknowledgment of your claim, please enclose a self-addressed, stamped envelope and an additional copy of this proof of claim.

The original of this completed proof of claim form must be sent by mail or hand delivered (FAXES NOT ACCEPTED) so that it is actually received on or before 5 00 pm on March 14, 2005 for all creditors except Governmental Units For a governmental unit: One hundred eighty (180) days after date relief ordered.

BY MAIL TO
VarTec Telecom Inc
c/o BMC Group
PO Box 1011
El Segundo CA 90245-1011

BY HAND OR OVERNIGHT DELIVERY TO
VarTec Telecom Inc
c/o BMC Group (Telephone 888/909-0100)
1330 East Franklin Ave
El Segundo CA 90245

THIS SPACE FOR COURT USE ONLY
FILED
FEB 24 2005
BMC
Vartec Telecom Inc
01595

DATE SIGNED 2/16/2005

SIGN and print the name and title if any of the creditor or other person authorized to file this claim (attach copy of power of attorney if any)

Zvi Kamil, General Director/President Aerotel, Ltd.

Penalty for presenting fraudulent claim is a fine of up to $500 000 or imprisonment for up to 5 years or both 18 U S C §§ 152 AND 3571

In Re Excel Communications Marketing, Inc
Case Number 04-81695-BJH-11

EXHIBIT A TO PROOF OF CLAIM OF AEROTEL, LTD

Statement of Claim

Aerotel, Ltd ("Aerotel"), an Israeli corporation having a principal place of business at 19 Amishbir Street, Holon 58856, Israel, is the owner of the patent rights conferred by U S Patent No 4,706,275 issued November 10, 1987 to Zvi Kamil, and all corresponding foreign patents, for an invention titled "Telephone System" (the "'275 Patent") The '275 Patent describes and claims a system and method for what is known to the parties as a Prepaid Calling Card

The claim by Aerotel is for the Debtor's willful and deliberate infringement of the '275 Patent through the sale or use of Prepaid Calling Card products and/or services as defined in the '275 Patent Aerotel makes a claim against the Debtor and against the Debtors in the cases listed on Schedule 1 hereto (collectively the "Debtors"), jointly and severally, for damages measured by a royalty equal to 4 7% of the Gross Sales Receipts received by the Debtors, or their respective predecessors, affiliates, subsidiaries, etc , for the sale, offer for sale and use of Prepaid Calling Cards and services The term "Gross Sales Receipts" shall mean the total compensation received by the Debtors for the sale of Prepaid Calling Cards and services less sales, use or other similar taxes, and less credit for any refunds, returns or charge-backs The 4 7% royalty rate is consistent with a recent damages claim Aerotel has made in litigation commenced by Aerotel for infringement of the '275 Patent The 4 7% royalty rate is higher than the 2 5% royalty rate

Aerotel has charged to willing licensees of the '275 Patent in the case of past infringement because Aerotel is being forced to litigate its claim for infringement

The information to determine the amount of the Debtors' Gross Sales Receipts is exclusively within the dominion and control of the Debtors Aerotel has, however, had access to certain public information that leads Aerotol to believe that the Gross Sales Receipts, for the Debtors, for the six-year period prior to the petition date is equal to approximately $3,000,000,000 (three billion dollars) Accordingly, Aerotel makes a claim against the Debtor for at least $141,000,000 (one-hundred and forty-one million dollars) (4 7% multiplied by $3,000,000,000) for infringement of the patent

Aerotel also seeks an increase in its claim for enhanced damages based upon the debtors' willful infringement Pursuant to 28 U S C § 284 damages can be awarded up to three times the amount of actual damages Aerotel also seeks to recover its costs and legal fees pursuant to 28 U S C § 285 at such time as those amounts are determined with reasonable certainty Accordingly, Aerotel reserves the right to increase its claim to recover damages as set forth in the above as may be determined by the Court In addition, Aerotel seeks pre-judgment interest on any amounts awarded as determined by the Court

Because Aerotel is unable to determine the amount of Gross Sales Receipts by Debtors, and because the Debtors appear to have comingled assets and income prior to the petition date, Aerotel has asserted a claim against each of the Debtors on a joint and several basis for all of damages as set forth above, regardless of which Debtor may have received income from the sale or use of services of Prepaid Calling Cards

Aerotel reserves the right to amend or modify its claim as set forth herein to the extent

necessary or appropriate as the facts and circumstances regarding the use and sale of Prepaid Calling Card products becomes available

In all events, by filing this Proof of Claim, Aerotel does not waive its right to contest the Bankruptcy Court's jurisdiction to determine the validity, enforceability or infringement of the '275 Patent

Statement of Related Claims

To preserve and protect all of its rights to recover damages for infringement of the '275 Patent, Aerotel has also filed claims for damages arising from infringement of the '275 Patent against each of the Debtors listed on Schedule 1 hereto in substantially the same form arising from infringement of the '275 Patent These claims should be considered jointly

SCHEDULE 1

Debtor	Case No
VarTec Telecom, Inc	04-81694-SAF-11
Excel Communications Marketing, Inc	04-81695-BJH-11
Excel Management Service, Inc	04-81696-BJH-11
Excel Products, Inc	04-81697-HCH-11
Excel Telecommunications, Inc	04-81698-SAF-11
Excel Telecommunications of Virginia, Inc	04-1700-BJH-11
Excel Teleservices, Inc	04-81699-BJH-11
Excelcom, Inc	04-81701-SAF-11
Telco Communications Group, Inc	04-81704-HDH-11
Telco Network Services, Inc.	04-81702-BJH-11
VarTec Business Trust	04-81703-HDH-11
VarTec Properties, Inc	04-81708-BJH-11
VarTec Resource Services, Inc	04-81705-BJH-11
VarTec Solutions, Inc	04-81706-SAF-11
VarTec Telecom Holding Company	04-81710-SAF-11
VarTec Telecom International Holding Company	04-81707-BJH-11
VarTec Telecom of Virginia, Inc	04-81709-HDH-11

United States Patent [19]

Kamil

[11] Patent Number: 4,706,275

[45] Date of Patent: Nov. 10, 1987

[54] TELEPHONE SYSTEM

[75] Inventor: Zvi Kamil, Ramat Gan, Israel

[73] Assignee: Aerotel Ltd., Ramat Gan, Israel

[21] Appl. No.: 797,658

[22] Filed: Nov. 13, 1985

[51] Int. Cl.[4] H04M 17/02

[52] U.S. Cl. 379/144; 379/154; 379/155

[58] Field of Search ..... 179/6.3 R, 6.3 CC, 2 CA, 179/7.1 R, 7.1 TP, 8 A; 379/143, 144, 154, 155, 146

[56] References Cited

U.S. PATENT DOCUMENTS

3,652,795	3/1972	Wolf et al.	179/2 CA
3,676,597	7/1972	Peterson	179/6.3 R
3,938,091	2/1976	Atalla et al.	179/6.3 R
4,439,636	3/1984	Newkirk et al.	179/7.1 R
4,595,983	6/1986	Gelnalo et al.	179/6.3 R

FOREIGN PATENT DOCUMENTS

2575016	6/1986	France	379/144

Primary Examiner—James L. Dwyer

Attorney, Agent, or Firm—Sandler & Greenblum

[57] ABSTRACT

A telephone system enabling prepayment for telephone calls, wherein special code and credit information is stored in memory in special exchanges and debited as the call progresses.

23 Claims, 4 Drawing Figures

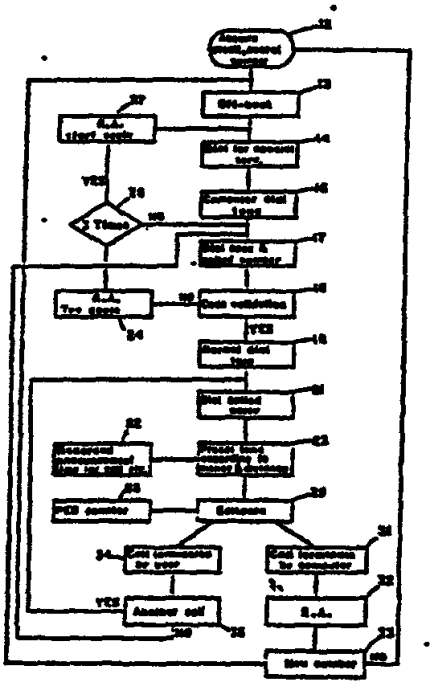

Fig. 1

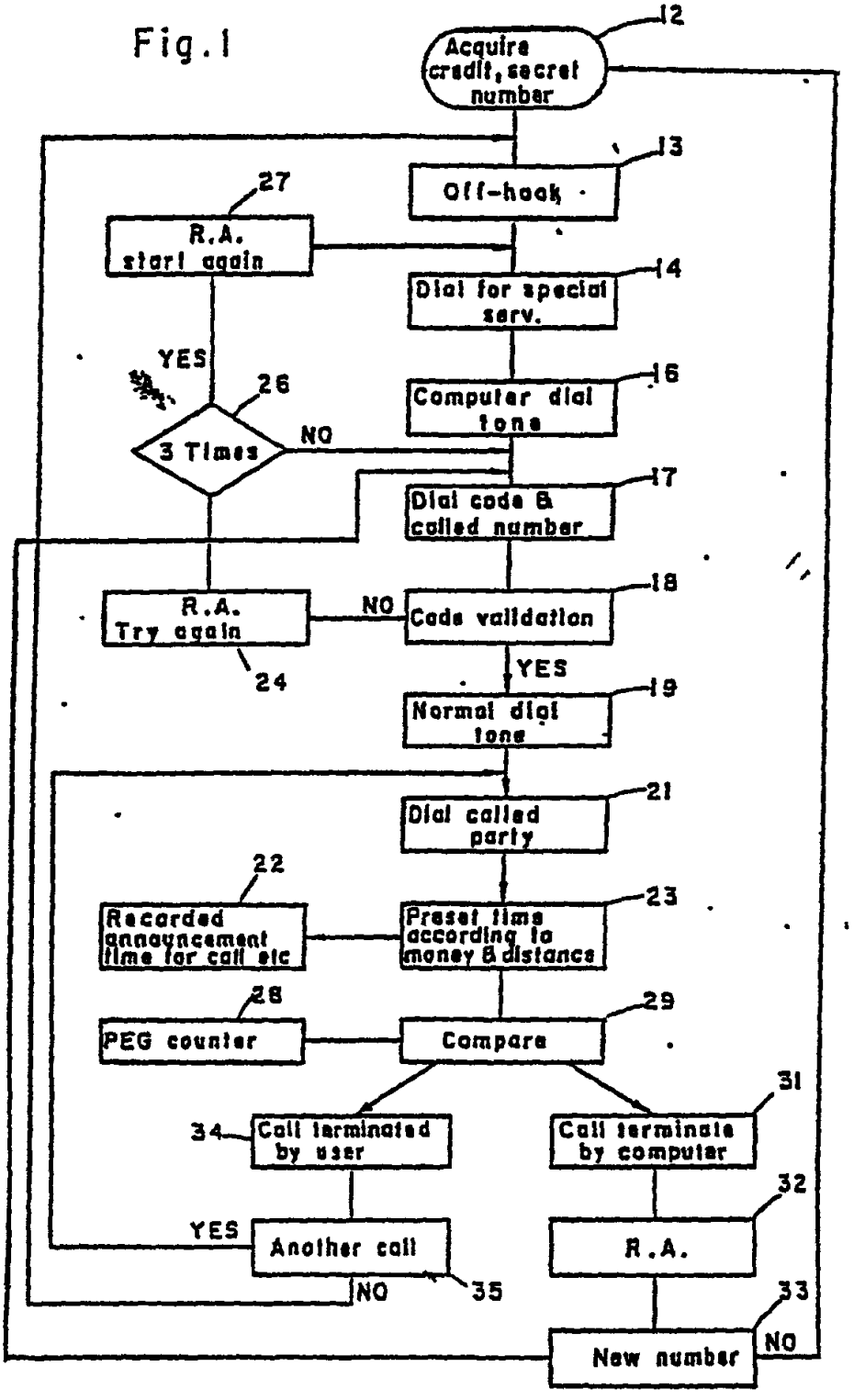
12
Acquire credit, secret number
13
Off-hook
27
R.A. start again
14
Dial for special serv.
YES
26
3 Times
NO
16
Computer dial tone
17
Dial code & called number
R.A. Try again
NO
18
Code validation
24
YES
19
Normal dial tone
21
Dial called party
22
Recorded announcement time for call etc
23
Preset time according to money & distance
28
PEG counter
29
Compare
31
34
Call terminated by user
Call terminate by computer
32
YES
Another call
R.A.
NO
35
33
New number
NO

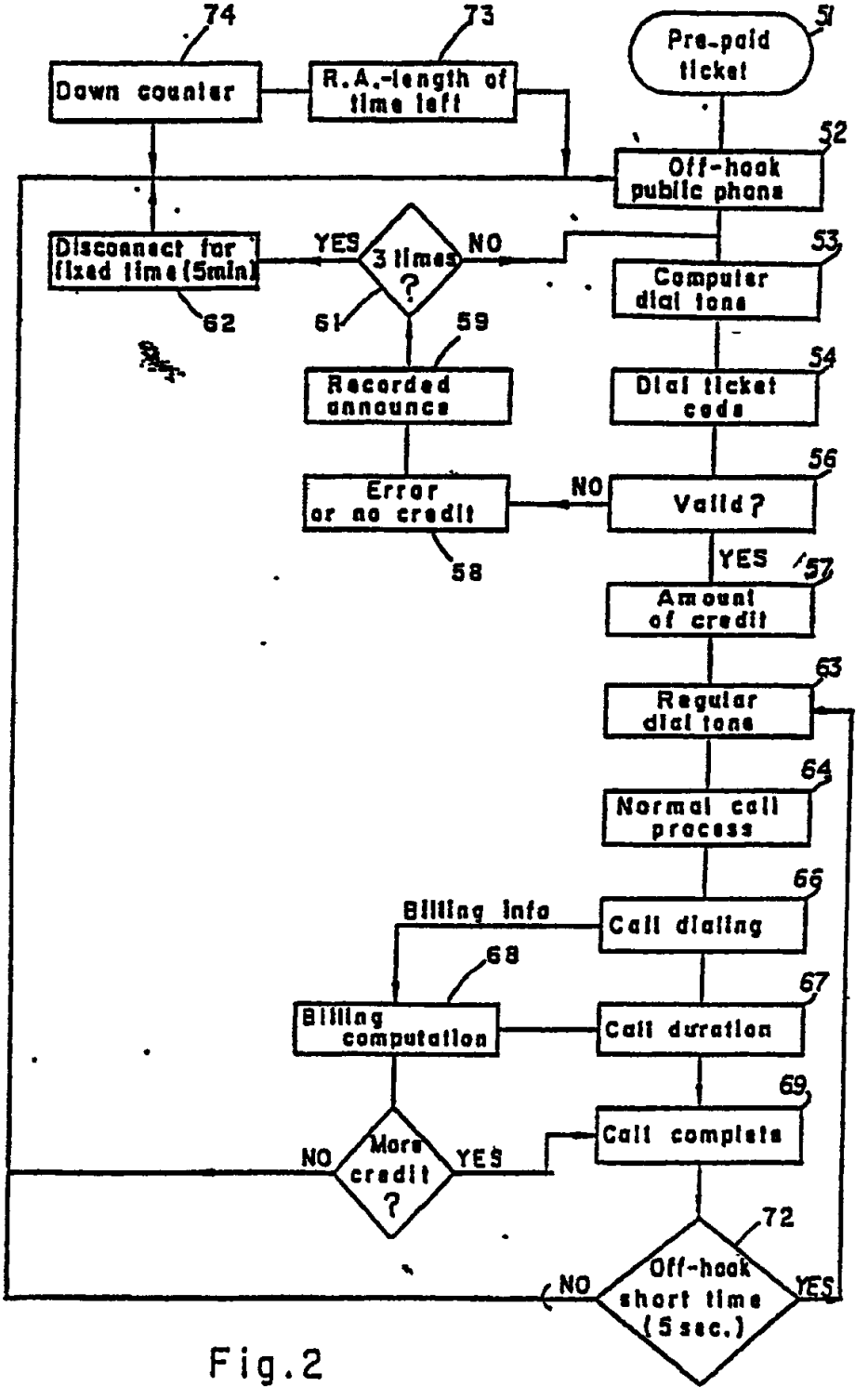
Pre-paid ticket
51
Off-hook public phone
52
Computer dial tone
53
Dial ticket code
54
Valid?
56
NO
YES
Amount of credit
57
Regular dial tone
63
Normal call process
64
Call dialing
66
Billing info
Call duration
67
Call complete
69
Off-hook short time (5 sec.)
72
NO
YES
Billing computation
68
More credit ?
NO
YES
Error or no credit
58
Recorded announce
59
3 times ?
61
YES
NO
Disconnect for fixed time (5min)
62
Down counter
74
R.A.-length of time left
73

Fig.2

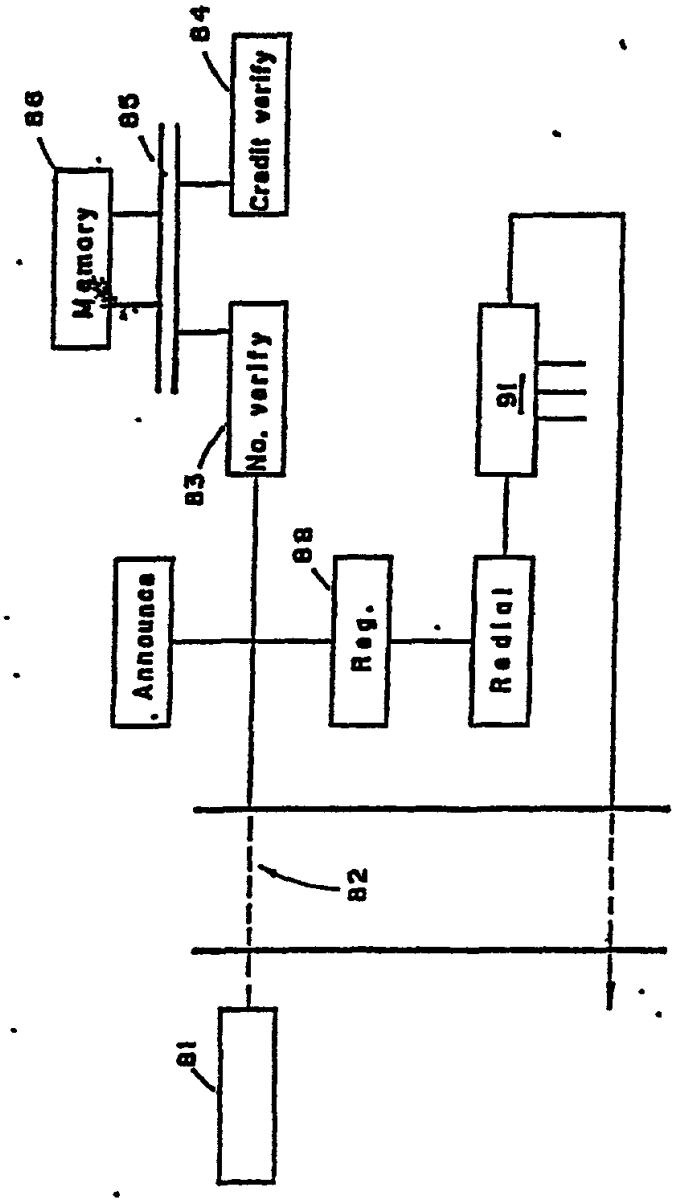
86
Memory
85
84
Credit verify
83
No. verify
Announce
88
Reg.
Redial
91
82
81

Fig. 3

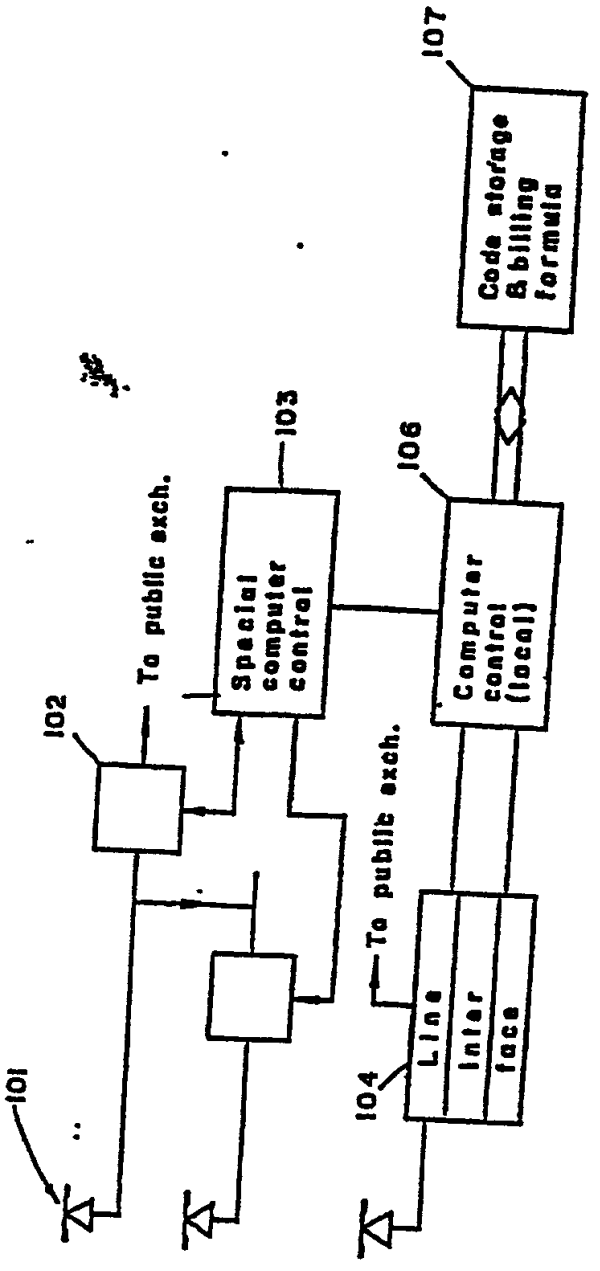
101
102
To public exch.
103
Special computer control
To public exch.
104
Line
Inter
face
106
Computer control (local)
107
Code storage & billing formula

Fig. 4

TELEPHONE SYSTEM

FIELD OF THE INVENTION

This invention is concerned with telephone systems and more particularly with telephone systems wherein when a prepayment is in force the prepaid party can use any telephone for completing telephone calls including toll calls. The telephone system includes public phones dedicated to use by prepaid parties.

BACKGROUND OF THE INVENTION

Telephones are generally available almost everywhere. Most telephones are private and any telephone calls are charged to the telephone on a monthly or bimonthly basis. It is not always possible or convenient to determine the time and charges for a single telephone call as it is made. Accordingly the use of somebody else's phone is many times awkward.

Further, toll or long distance telephone calls are used more and more as people travel more and conduct business on a less localized basis. Presently long distance calls can be made by charging the call to a local telephone such as for example to a telephone in a hotel room. The long distance call can be made by instant payment such as for example when using a public payphone. The long distance call can be made by charging the call to the calling party's home or business telephone or by using a telephone company credit card number. The long distance call can also be made as a "collect call" where the called party has to accept the call and is then billed the time and charges for the call.

Each of these present day methods for making and paying for toll calls has significant detriments. For example when a call is charged to hotel room telephones the hotel adds its charges to the call thereby disproportionately increasing the cost of the call.

It is extremely difficult to make long distance calls from public payphones since it requires large amounts of the coins—not ordinarily carried about—especially when touring or on a business trip.

The use of credit card calls often result in mistaken charges billed to the telephone credit card number. Further to obtain a telephone credit requires credit checks and the establishment of credit often almost impossible to acquire.

Salesmen similarly should be able to call their home offices from a customer's telephone without having the call charged to the customer's telephone which is inconvenient or to their home office phone with the previously mentioned difficulties and the added cost.

Thus there is a long felt need for a system which enables making telephone calls including local or toll calls conveniently, inexpensively and from any telephone. Thus if a party wants to make a call, be it a local call or a long distance national or international call, he should be able to accomplish the call from the nearest available telephone.

BRIEF DESCRIPTION OF THE INVENTION

According to a broad aspect of the invention, a telephone system is provided for enabling prepayment of telephone calls, said system comprising:

means for coupling a calling party's station to a special central office for certifying said calling party responsive to a certified code transmitted from the calling party's station to the special central office when said calling party has a credit on a prepayment, and

means for enabling the connection of said calling party station to desired called party station responsive to said certification.

According to a feature of the invention means are provided in the special central station for further increasing the cost effectiveness of the system by selectively routing the call over the least expensive available lines.

A further feature of the invention provides for dedicated public paystations connected to the special central stations thereby enabling the use of the paystations to connect to called party telephone stations without the use of coins but instead by using said certifiable code.

According to another broad aspect of the present invention, a method enabling the coinless use of dedicated public telephones is provided, said method comprising the steps of:

connecting calling station dial means to a special central station,

transmitting identification signals from the station to the central station, said identification signals generated responsive to the operation of the station dial means or other signal means;

comparing calling party dialed signals to said identification signals stored at said central station for verification, and

connecting the calling station to a called station if there is verification.

According to a feature of the invention the verification includes a code number verification as well as a credit verification,

According to another feature of the invention the connection is automatically opened when means such as a peg counter indicates that the calling party has reached a credit limit.

Yet another feature of the present invention includes connecting a special dial tone from the central station to indicate that the dialing apparatus of the calling party station has been connected to the computer. A regular dial tone is transmitted to the calling party station when verification is complete and successful; that is, when the calling party has used the proper code number and has credit in his account to enable the call. Credit of course can be established by the deposit of money with the telephone company sufficient to make a certain number of calls.

BRIEF DESCRIPTION OF THE DRAWINGS

The above mentioned and other objects and features of the present invention will be best understood when considered in conjunction with the following description of the invention, explained with the aid of the accompanying drawings, wherein:

FIG. 1 is a flow chart showing the inventive use of any private telephone by a prepaid customer,

FIG. 2 is a flow chart showing the inventive use of dedicated paystations not requiring coins or special slugs,

FIG. 3 is a block diagram showing of parts of the telephone system necessary for carrying out the invention, and

FIG. 4 is a block diagram view of a typical telephone system for using the invention.

GENERAL DESCRIPTION

The customer, such as a regular telephone user or a traveller acquires a special code, a credit amount and the telephone number of the special central offices by either a cash or credit card payment. The code, the credit amount and telephone numbers may be acquired, for example through the regular credit card companies and charged to the acquirer's credit card. Alternatively, the credit amount, the telephone numbers and identifying code can be purchased at sales points such as in airports, hotels, rent-a-car stations and the like. The amount paid is credited to the acquirer for use against future telephone calls. The credited amount is stored in a memory at the special central office along with the special code. The acquisition of the code and telephone number is indicated at block 12 of FIG. 1.

Subsequently thereto, the acquiring party wishes to make a telephone call which may be a local call or a toll call. He uses the nearest available telephone, removes the handset and dials a special central office, as indicated at blocks 13 and 14. The telephone in this example is a private station. When he is connected to the special central office (traveller phone services office) or exchange, 14, a special dial tone is sent from the special exchange to the calling station. When the calling party hears the special dial tone, indicating that the computer at the exchange is ready for him he dials the identifying code and the called number he wants as indicated at block 17. The computer at the special exchange checks the code and registers the desired called number.

If the code number is a genuine code with credit i.e. valid as indicated at block 18 and 19 a regular dial tone is sent to the calling party station as he is connected to the regular telephone system. The computer at the special exchange routes the call on the most economical available lines. According to prior arrangements with long distance line suppliers if it is a toll call.

The calling party's predialed numbers are transmitted as indicated at block 21. Of course the system can be arranged so that the calling party dials the called party responsive to receipt of regular dial tone.

In a preferred embodiment the special exchange equipment provides an artifical or prerecorded voice announcement stating the amount of credit available and that the amount of credit is equivalent to so many minutes of talking time on the call being connected. This announcement is actively shown at block 22. The announcement is made according to the charge rate for the distance between calling and called parties shown at block 23.

In a preferred embodiment the credit check is accomplished contemperaneously with the number code verification. If the code is invalid an announcement is made advising the customer to try again as shown at block 24. The customer is allowed a plurality of tries (such as three) before being disconnected from the special central office as shown at blocks 26 and 27. If he is trying again for the second and third times he is reconnected to receive the special dial tone. After the third time he is released from the special exchange after receiving a recorded announcement explaining that the code is not valid.

It is within the scope of the invention as previously described for the calling party to dial while the verification is being accomplished, in which case when the calling party hears normal dial tone, a register in the exchange can then input the dialed information to cause the exchange to complete the call between the calling party and the called party.

At this time as indicated by block 28 the normal time and distance computing circuit is shown as a peg counter, is put into service to provide information for timing the call against the available credit. The information from the peg counter is sent to a comparator 29 to continuously determine whether the calling party's credit is sufficient to pay for the call. When the credit equals the used time rate the call is automatically ended by the computer as indicated by the block 31.

Block 31 opens the connection between the calling and called party, the connection to the computer however remains and an announcement is made to notify the customer to insert another code number, if available. This activity is indicated at block 32. If a new code number is not inserted as indicated in block 33 by the yes output, then the calling party again received dial tone and can dial a new called party. In other words he goes back to the input to block 17 where he has computer tone and he is told to dial the code number and the calling party number. All the steps of block 17, 19, 21 etc are repeated and the new call is connected. If he does not have a new code number, then the connection between the computer and the calling party is open. The calling party is then merely off-hook with a phone set.

The call can also be terminated after block 29 by the user customer as indicated at block 34. In other words the call can be disconnected by the computer if he runs out of time or by the user. When the call is terminated by the user, and he still has credit, he is again connected to normal dial tone, and he merely has to dial another call, if he so desires. If he does not want to dial another call, then he returns the handset to the hookswitch. If he does not want to make another call he dials the number after hearing normal dial tone at the input block 19. Thus the customer does not have to repeat the entire connection back to the computer and have the validation procedure repeated. He had already been checked and validated and therefore he is connected to a normal dial tone. The process is repeated as long as credit remains.

FIG. 2 is the flow chart showing the use of dedicated public telephone. Here again the customer calling party must have a prepaid code number as indicated at 51. He goes off hook with the dedicated public telephone, indicated at block 52. The calling station receives computer dial tones as soon as going off hook as indicated at block 53. He then dials in the secret code number as indicated at block 54 and the system checks to see if he has a valid ticket number, if he does as indicated in block 56, he is visually or audibaly notified of the amount of credit available in his code as indicated in block 57.

If he does not have a valid code then as indicated in block 58 he is notified that he has inserted an invalid code. In a preferred embodiment a recorded message is sent as shown in block 59, and he is told that he has dialed an invalid code. He is allowed to err a plurality of times, say three as indicated at block 61.

If the inputted code is invalid less than three times, then he is again connected to the computer dial tone. If an invalid code is inputted more than three times then the phone is disconnected for a time period (say five minutes) as indicated at block 62. The disconnected time is to discourage practical jokers or anybody maliciously trying to tie up the telephone. After the five

minutes time out the phone is returned to its normal operating capabilities. A recorded message indicated at block 73, may be sent to notify potential users that this phone is out of order for diminishing periods of time i.e. 3 minutes, 4 minutes etc.

After verification of the code number and credit the calling party is connected to the regular telephone system and receives regular dial tone as indicated at block 63. The calling party goes through the normal call process indicated in block 64. Responsive to his dialing indicated at block 66 he is given a call duration announcement indicating the length of call time his credit amount will allow. Block 67 also indicates the time change rate of the call this information is continuously computed and subtracted from the credit amount. The call can be terminated as indicated in block 69 either because no more credit or by the user. The user terminates by dialing a special code for example or by closing the hook switch to say ten seconds when there is any more credit left, as indicated at block 71 the calling party is directed back to regular dial tone i.e. to the input of block 63 as indicated in block 72. If there is no credit left then the calling party phone is back to where the phone is connected to the computer and receiving computer dial tone. If he does not dial in his code number after a given time period he is disconnected. In a preferred embodiment he is notified to input a code or be disconnected. This is indicated at block 73 and 74.

In FIG. 3 the basic operation of the prepaid telephone call system is shown in block diagram form. The calling phone is indicated at 81. The telephone 81 is connected to a regular telephone system indicated at 82. The calling party dials the special charge number and by a code number verifier 83. The code number verifier looks into a section of the memory as indicated by the code to verify that the code is valid. When a valid code is confirmed the credit for that code is checked in the memory to determine how much credit is left. The announcing system for the purposes indicated in the flow diagram is shown at 87.

It should be understood that while announcement are shown, visual indication can also be used. However in a preferred embodiment audio announcement are used. When the number and credit are verified, the calling party is then connected through a register indicated at 88, to a re-dialer 89. The register stores the called number received from the calling party and directs the redialer 89 to dial the number after verification, the dialed number or dial tones are directed through router 91 to the regular telephone system. The router selects the best possible route cost-wise for the particular call if it is toll call.

The number verifier and credit verifier circuits are connected through a memory 86 through a bus 85. The memory is compartmentilized so that the code number can be easily checked through checking only a portion of the memory according to the code. Similarly verification of credit can be made once the code is verified by checking a separate portion of memory. The entire system is under the control of the local and routing computers 95.

FIG. 4 shows the dedicated public telephone in block diagram form. Herein the dedicated phones are shown at 101. The dedicated phones are connected through switches such as switch 102, and a regular exchange, to the special exchange. A special computer control 103 is located at the public exchange operated through a line interface 104. The telephones 101 are connected to the computer control 106 for code and credit verification in conjunction with memory 107. The dedicated telephone operates in much the same way as the private phone a difference in the special computer control used to time out the dedicated public telephone.

Thus, a telephone system is provided that can utilize prepayment for telephone calls which can be made from any telephone or from dedicated telephones.

The calling customer has the ability to disconnect from the called party and stay connected to the special exchange by dialing a special number for example. He can switch to another code number during the call, before the call and after the call and still remain connected to the special central office.

With the dedicated telephone when the calling party replaces the hand set the hook switch a short delay of say 10 seconds have passed, an announcement is made to the calling party notifying the calling party that he may call another party without calling the computer again within the allocated time.

According to a preferred embodiment special codes say 999 can be used to terminate a call. The calling party can then get another call without having to redial the special exchange and his code. Another special code say 888 can be used to input more credit with another code number.

It should be understood that when the calling party's credit is checked to institute a call and also during the call the position in the memory is supplied with a disenabling code to prevent the simultaneous use of the two different telephones on the same code. In addition the codes each have a home memory which other special exchanges can check.

Accordingly, a method of using any telephone for prepaid telephone calls is provided. A system is thus provided that benefits travellers and others having the need for the available of telephone service form any telephone.

While the invention is described using the example embodiment and method, it should be understood that this description is made by way of example only and not as a limitation on the scope of the invention.

What is claimed is:

1. A unique method for making telephone calls from any available telephone, said method comprising the steps of:

(a) obtaining a special code by depositing a prepayment amount;

(b) storing the prepayment amount in a memory in a special exchange for use in verifying calling party calls;

(c) dialing said special exchange when a telephone call connection is desired;

(d) inputting such special code for verification;

(e) inputting the number of the called party;

(f) verifying the special code and comparing the prepayment amount less any deduction for previous calls in the memory and the minimum cost of the inputted call;

(g) connecting called party to the calling party in response to the verification;

(h) monitoring the prepayment amount less deductions for the running cost of the call; and

(i) disconnecting said call when the prepayment amount has been spent.

2. The method of claim 1 wherein sad connecting step includes special routing.

3. The method of claim 1 including retaining the connection between the calling station and the special exchange for a set period of time after the call is terminated.

4. The method of claim 1 including the step of preventing reconnecting the calling party to the special exchange for a definite time period after a set number of no verification encounters.

5. The method of claim 1 including the step of interconnecting a plurality of special exchanges, and

exchanging code and credit information between the interconnected special exchanges.

6. The method of claim 1 including the step of disconnecting the called party station while keeping the calling party station connected to the special exchange to enable the calling party to connect to another called party.

7. The method of claim 1 including the step of adding to the prepayment while connected to the special exchange.

8. The method of claim 1 including the step of preventing the use of the same special code from different calling party stations at the same time.

9. A telephone system for facilitating telephone calls including toll calls from any available telephone station for prepaid customers, said system comprising:

(a) means for coupling a calling party station to a special exchange;

(b) memory means in said special exchange for storing special customer codes and credit information individual to each prepaid customer;

(c) means for verifying said calling party responsive to a code transmitted from the calling party's station to the special exchange when one of the codes matches the code in the memory means and the calling party has unused credit and;

(d) means for completing a call from said calling party station to a called station responsive to said verification, said means for verifying including means for monitoring the credit of the calling party during a completed call.

10. The system of claim 9 wherein said means for completing includes least cost routing means.

11. The system of claim 10 wherein said least cost routing means includes means for choosing between long lines, satellite and/or microwave links.

12. The system of claim 11 wherein said means for monitoring includes means for continuously monitoring the credit of the calling party during a completed call.

13. The system of claim 12 including peg counter means for indicating that the prepaid customer has reached its credit limit.

14. The system of claim 11 wherein said calling station is a dedicated public phone including means for coinless coupling to said special exchange.

15. The system of claim 11 wherein timing means are provided for retaining the coupling between said calling party station and said special exchange for a certain time period after the called party station goes on hook.

16. The system of claim 11 including special dial tone generating means for indicating connection of the calling station to said special exchange.

17. The system of claim 11 including means for notifying the prepaid customer of the amount of credit available.

18. The system of claim 11 and means for preventing recoupling to said special exchange for a set time period responsive to a certain number of consecutive no verification occurences.

19. The system of claim 11 and means for interconnecting a plurality of special exchanges to enable the interchange of code and credit information.

20. The system of claim 11 and means for disconnecting the called party station while keeping the calling party station coupled to the special exchange to enable the calling party to dial another called station through the special exchange.

21. The system of claim 11 and means for adding credit while coupled to the special exchange.

22. The system of claim 11 and means for preventing use of the same special code from two different calling party stations at the same time.

23. A method for making telephone calls comprising:

(a) issuing a valid special code to a calling party when a prepayment amount is deposited to the credit of said calling party;

(b) storing the prepayment amount in a memory in a special exchange;

(c) dialing said special exchange when the calling party wishes to make a telephone call to a called party;

(d) inputting a special code and the number of the called party;

(e) connecting the calling party to the called party only if the special code inputted by the calling party is a valid special code, and in addition, only if the current initial prepayment amount in the memory exceeds the minimum cost of a call to the inputted number;

(f) monitoring the running cost of the call in accordance with its duration;

(g) disconnecting the calling party from the called party when the calling party hangs up, or when the running cost of the call exceeds the current initial prepayment amount, whichever occurs first; and

(h) deducting from the initial prepayment amount the running cost of the call.

* * * * *

SCHEDULE 1

Debtor (name and address)	Case No
VarTec Telecom, Inc	04-81694-SAF-11
Excel Communications Marketing, Inc	04-81695-BJH-11
Excel Management Service, Inc	04-81696-BJH-11
Excel Products, Inc	04-81697-HCH-11
Excel Telecommunications, Inc.	04-81698-SAF-11
Excel Telecommunications of Virginia, Inc	04-1700-BJH-11
Excel Teleservices, Inc	04-81699-BJH-11
Excelcom, Inc	04-81701-SAF-11
Telco Communications Group, Inc	04-81704-HDH-11
Telco Network Services, Inc	04-81702-BJH-11
VarTec Business Trust	04-81703-HDH-11
VarTec Properties, Inc	04-81708-BJH-11
VarTec Resource Services, Inc.	04-81705-BJH-11
VarTec Solutions, Inc	04-81706-SAF-11
VarTec Telecom Holding Company	04-81710-SAF-11
VarTec Telecom International Holding Company	04-81707-BJH-11
VarTec Telecom of Virginia, Inc	04-81709-HDH-11

BRAGAR WEXLER EAGEL & MORGENSTERN, PC
ATTORNEYS AT LAW
885 THIRD AVENUE SUITE 3040
NEW YORK NEW YORK 10022
(212) 308-5858
FACSIMILE (212) 486-0462

EURYDICE A KELLEY

KELLEY@BRAGARWEXLER COM

February 23, 2005

VIA FED EX

VarTec Telecom, Inc
c/o BMC Group
1330 East Franklin Ave
El Segundo, CA 90245

Re *In re VarTec Telecom, Inc , et al* Case No 04-81694-SAF-11
United States Bankruptcy Court, Northern District of Texas,
Dallas Division

To whom it may concern

Please find enclosed seventeen different Proofs of Claim along with one copy of each Please file the appropriate Proof of Claim in each one of the seventeen separate bankruptcy cases listed on the attached Schedule 1

Please return the copies of the Proofs of Claim stamped received via Fed Ex in the enclosed self-addressed envelope

Please call me with any questions Thank you for your time and assistance

Very truly yours,

Eurydice A Kelley

Encl

152

OVERNIGHT THU

Deliver By 24FEB05 A1

7 FORM 0215

LAX

XH AVXA

FedEx Express **US Airbill**

FedEx Tracking Number 8507 6176 5997

1 From

Date FedEx Tracking Number 850761765997

Sender's Name Phone

Company

Address Dept./Floor/Suite/Room

City State ZIP

2 Your Internal Billing Reference

3 To

Recipient's Name Phone

Company

Recipient's Address Dept./Floor/Suite/Room

We cannot deliver to P.O. boxes or P.O. ZIP codes

Address

To request a package be held at a specific FedEx location, print FedEx address here

City State ZIP

8507 6176 5997

4a Express Package Service *Packages up to 150 lbs*

- [x] FedEx Priority Overnight — Next business morning
- [ ] FedEx Standard Overnight — Next business afternoon
- [ ] FedEx First Overnight — Earliest next business morning delivery to select locations
- [ ] FedEx 2Day — Second business day
- [ ] FedEx Express Saver — Third business day

FedEx Envelope rate not available. Minimum charge: One pound rate

4b Express Freight Service *Packages over 150 lbs*

- [ ] FedEx 1Day Freight* — Next business day
- [ ] FedEx 2Day Freight — Second business day
- [ ] FedEx 3Day Freight — Third business day

Call for Confirmation

5 Packaging Declared value limit $500

- [ ] FedEx Envelope*
- [ ] FedEx Pak* — Includes FedEx Small Pak, FedEx Large Pak, and FedEx Sturdy Pak
- [ ] FedEx Box
- [ ] FedEx Tube
- [ ] Other

6 Special Handling

- [ ] **SATURDAY Delivery** — Available ONLY for FedEx Priority Overnight, FedEx 2Day, FedEx 1Day Freight, and FedEx 2Day Freight to select ZIP codes
- [ ] **HOLD Weekday** at FedEx Location — Not available for FedEx First Overnight
- [ ] **HOLD Saturday** at FedEx Location — Available ONLY for FedEx Priority Overnight and FedEx 2Day to select locations

Does this shipment contain dangerous goods?

One box must be checked.

- [ ] No
- [ ] Yes — As per attached Shipper's Declaration
- [ ] Yes — Shipper's Declaration not required
- [ ] Dry Ice — Dry Ice, 9, UN 184 ____ x ____ kg
- [ ] Cargo Aircraft Only

Dangerous goods (including Dry Ice) cannot be shipped in FedEx packaging.

7 Payment *Bill to* Enter FedEx Acct. No. or Credit Card No. below

- [ ] Sender — Acct. No. in Section 1 will be billed
- [ ] Recipient
- [ ] Third Party
- [ ] Credit Card
- [ ] Cash/Check

Total Packages Total Weight Total Charges

Credit Card Auth

†Our liability is limited to $100 unless you declare a higher value. See the *FedEx Service Guide* for details.

8 Sign to Authorize Delivery Without a Signature

By signing you authorize us to deliver this shipment without obtaining a signature and agree to indemnify and hold us harmless from any resulting claims.

Questions? Visit our Web site at fedex.com
or call 1.800.GoFedEx 1.800.463.3339

SRS Rev. Date 11/03 Part #158879 1991 003 FDE PRINTED IN U.S.A.

466

RECD FEB 24 2005 BMC

The World On Time®